Design of a Bandgap Voltage Reference

Student: Silaghi Sebastian

Table of Contents

1. Bandgap voltage reference design

1.1. Requirements
1.2. Topology
1.3. Operational amplifier design
1.4. Start-up circuit

2. Simulation results

2.1. Temperature coefficient
2.2. Quiescent current
2.3. Output voltage accuracy
2.4. Stability analysis
2.5. Start-up time
2.6. PSRR

1. Bandgap voltage reference design

1.1. Requirements

Parameter	Test condition	Min. Value	Typ. Value	Max. Value	Unit
Output voltage	PVT	-	1.2	-	V
Precision	-	-3	-	3	%
Supply voltage	-	1.6	1.8	2	V
Resistance tolerance	-	-1	-	+1	%
Quiescent current	PVT	-	30	-	µA

Tabel 1. Reference voltage requirements

1.2. Topology – Brokaw bandgap design steps

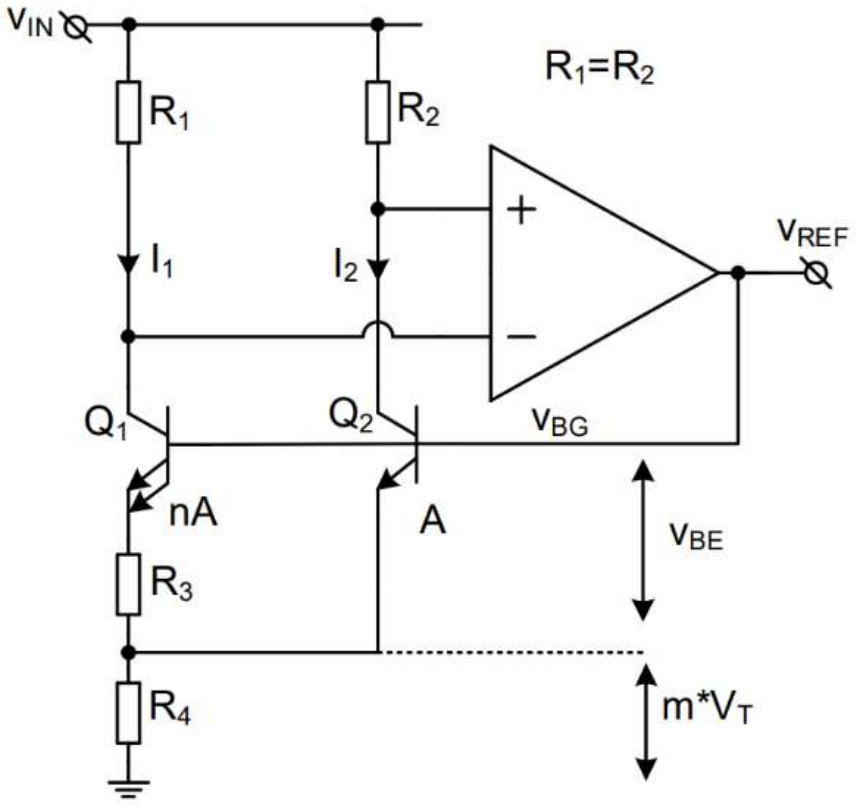

Figure 1. Voltage reference schematic

The **output voltage** of the circuit is:

$$V_{BG} = v_{BE2} + V_T \cdot \frac{2R_4}{R_3} \ln n$$

The **zero-temperature coefficient condition**:

$$\left.\begin{aligned} \frac{\partial v_{BG}}{\partial T} &= 0 \\ \frac{\partial V_T}{\partial T} &= +0.087 \frac{mV}{1K} \\ \frac{\partial v_{BE2}}{\partial T} &= -2 \frac{mV}{1K} \end{aligned}\right\} \Rightarrow \frac{2R_4}{R_3} \cdot \ln(n) = 23.25$$

1.2. Topology – Brokaw bandgap design steps

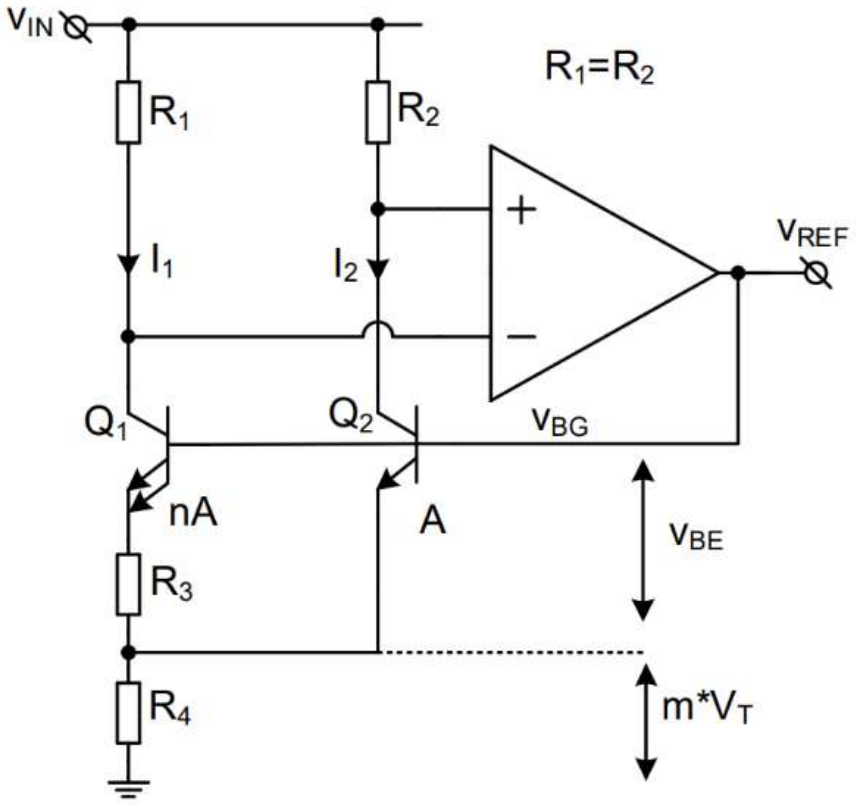

Figure 2. Voltage reference schematic

$$\left.\begin{array}{l}\dfrac{2R_4}{R_3}\cdot\ln(n)=23.25\\ n=8\end{array}\right\}\Rightarrow\frac{R_4}{R_3}=5.6$$

$$I_1=I_2=6\mu A\quad\Rightarrow\quad\left\{\begin{array}{l}R_3=11.2k\Omega\\ R_4=55.2k\Omega\end{array}\right.$$

$$R_1=R_2\approx\frac{V_{in}-V_{BG}}{I_2}\approx 100k\Omega$$

1.3. Operational amplifier design – Miller OTA

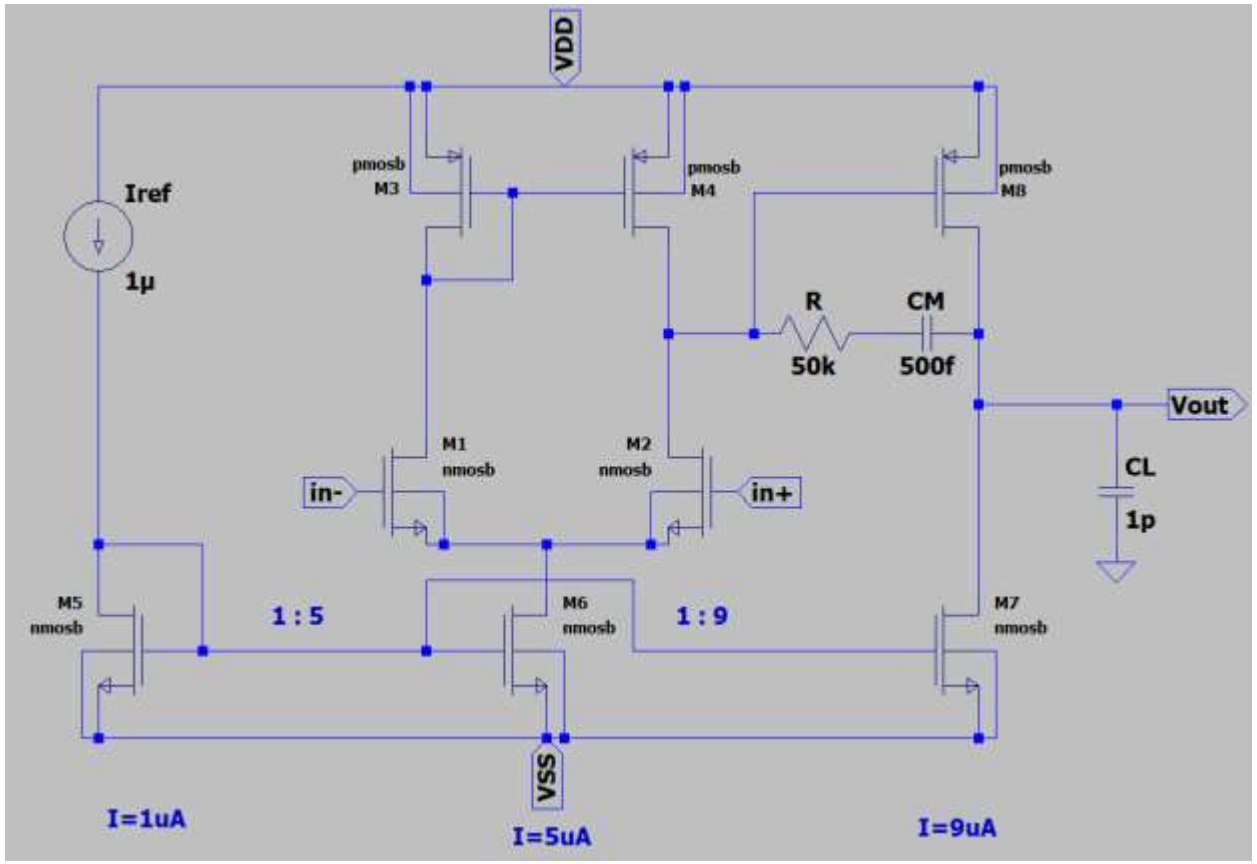

Figure 3. Schematic of the Miller OTA

Main requirements:

a0 > 60dB
PM > 40deg
GM > 10dB
C_L = 1pF
I_{AO} = 15µA

Obtained parameters:

a0 = 85dB
PM = 65deg
GM = 15dB
I_{AO} ≈ 15µA
SR = 12V/µs
GBW = 22MHz

1.3. Operational amplifier design – Miller OTA

M	Idref	(W/L)ref	Vdsatref	Vthref
NMOS	50µA	5µm/1µm	240mV	450mV
PMOS	50µA	15µm/1µm	257mV	450mV

Tabel 2. Reference set transistors

For the sizing of each transistor:

$$\frac{Idref}{Id} = \frac{(W/L)ref}{W/L}\left(\frac{Vdsatref}{Vdsat}\right)^2$$

1.3. Operational amplifier design – Miller OTA

M	Id[A]	Vds[V]	Vdsat[V]	gm[S]	W[m]	L[m]
M5	1.00E-06	6.06E-01	1.48E-01	1.21E-05	2.60E-07	1.00E-06
M6	4.97E-06	1.02E+00	1.50E-01	5.84E-05	1.30E-06	1.00E-06
M1	2.49E-06	3.46E-01	6.61E-02	5.27E-05	5.76E-06	1.00E-06
M2	2.49E-06	3.46E-01	6.61E-02	5.27E-05	5.76E-06	1.00E-06
M3	2.49E-06	6.31E-01	1.60E-01	2.43E-05	2.19E-06	1.00E-06
M4	2.49E-06	6.31E-01	1.60E-01	2.43E-05	2.19E-06	1.00E-06
M7	9.02E-06	1.50E+00	1.50E-01	1.05E-04	2.30E-06	1.00E-06
M8	9.02E-06	5.03E-01	1.63E-01	8.82E-05	7.89E-06	1.00E-06

Tabel 3. Miller OTA transistors

1.4. Start-up circuit – working principle

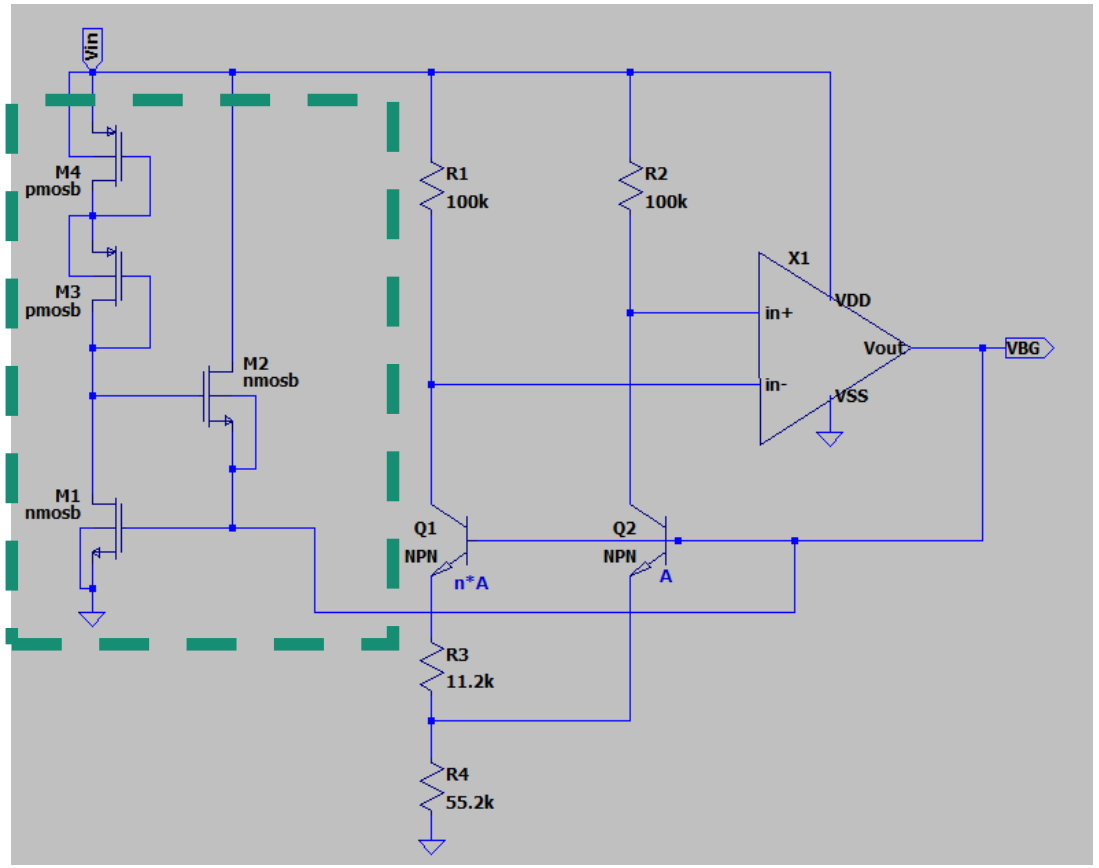

Figure 4. Bandgap start-up circuit

When **VBG = 0** M1 - off, M2 - on and pulls down the gate of M3, M4 => M3, M4 - on and source current from Vin into the core.

When **VBG ↑** M1 - on and forces M2 - off and loses its ability to pull down the gate of M3, M4 => M3, M4 - off and no current flowing

1.4. Start-up circuit – transient behavior

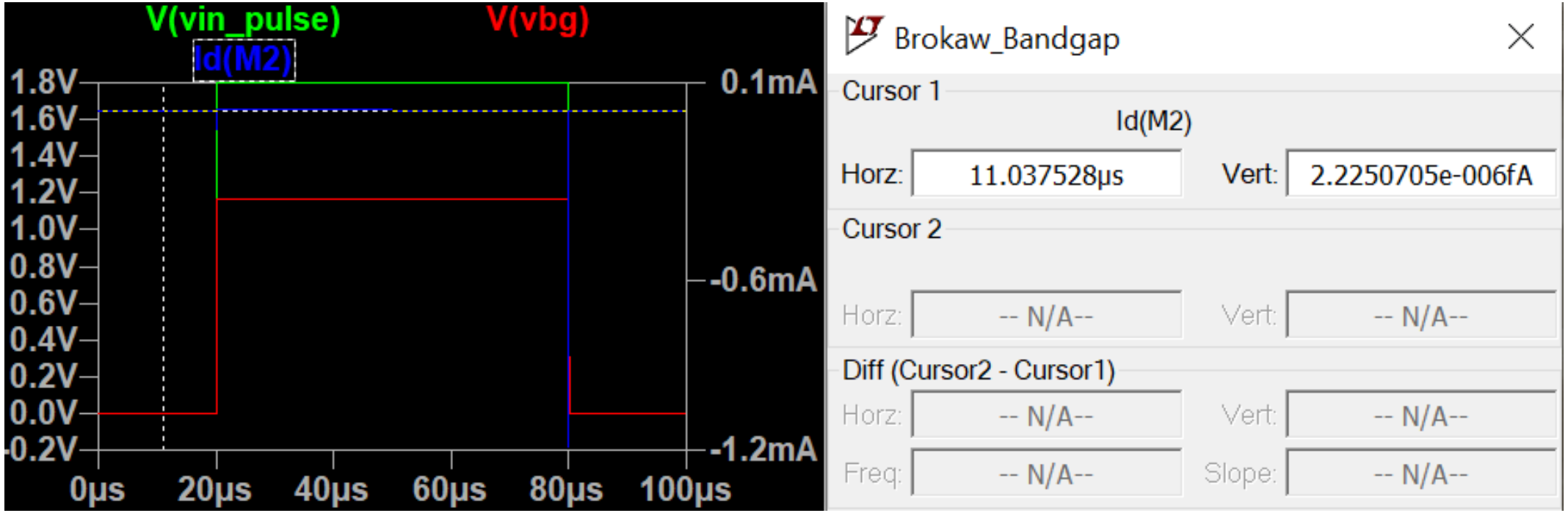

Figure 5. Transient behavior of start-up circuit

2. Simulation results

2.1. Temperature coefficient

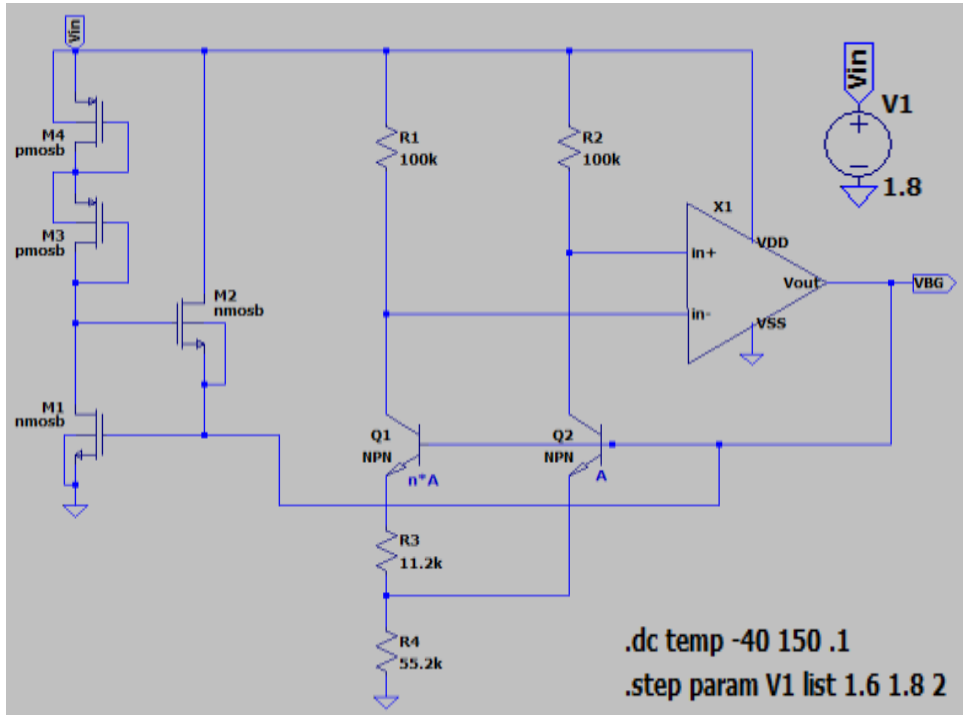

Figure 6. Bandgap circuit and simulation setup

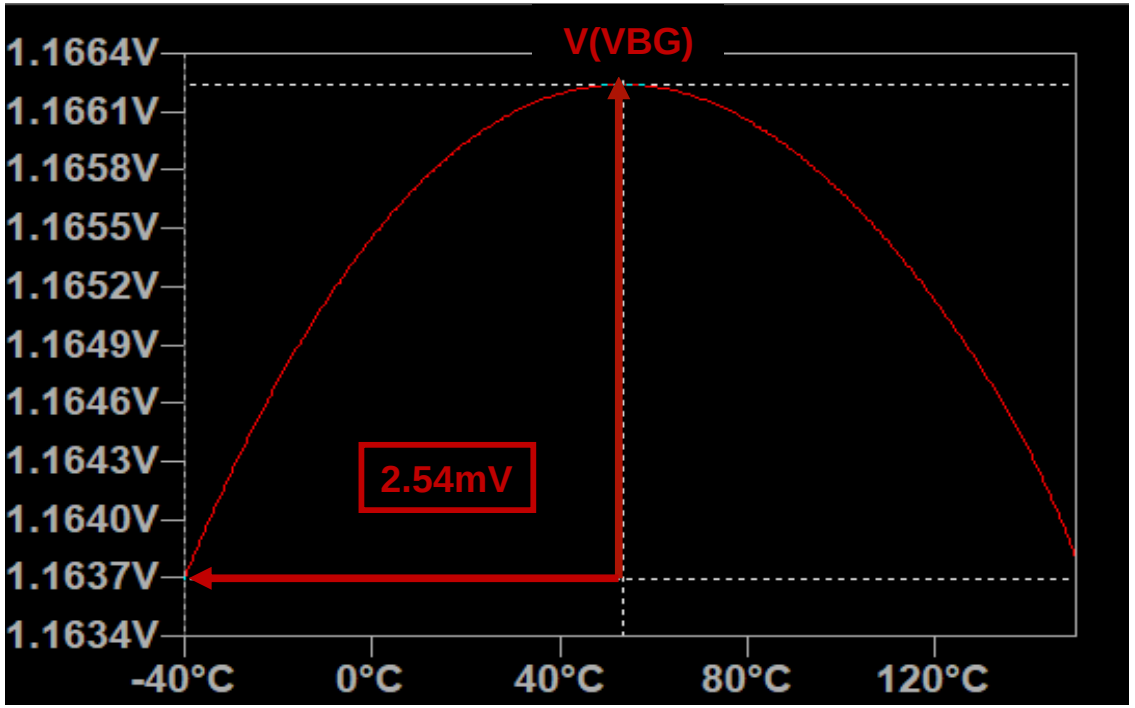

Figure 7. Temperature coefficient of the designed bandgap voltage

2.2. Quiescent current – variation with temperature

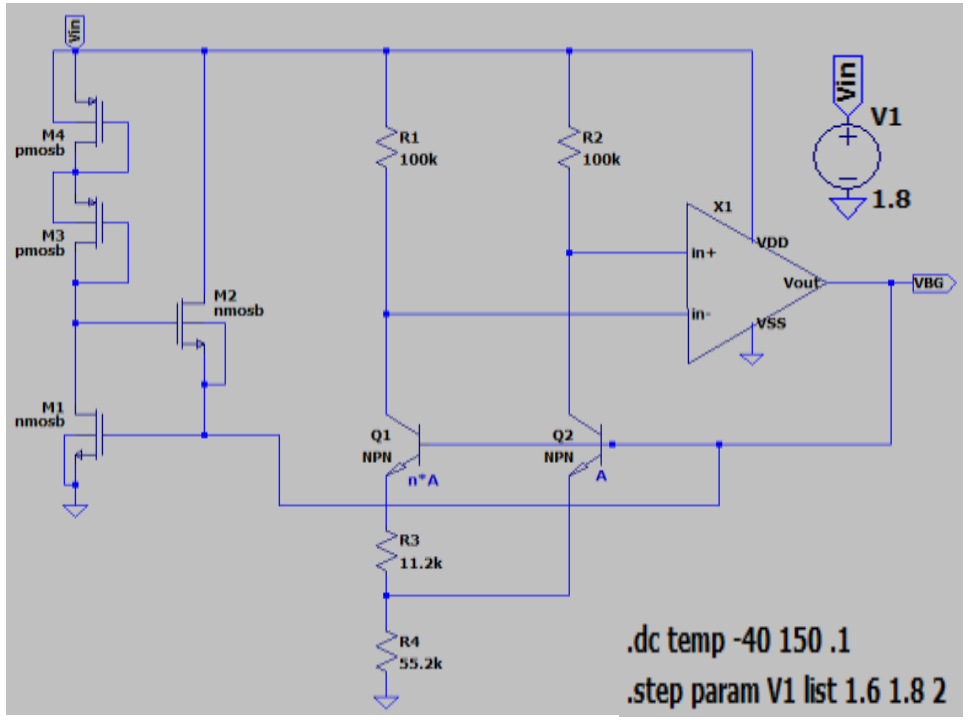

Figure 8. Bandgap circuit and simulation setup

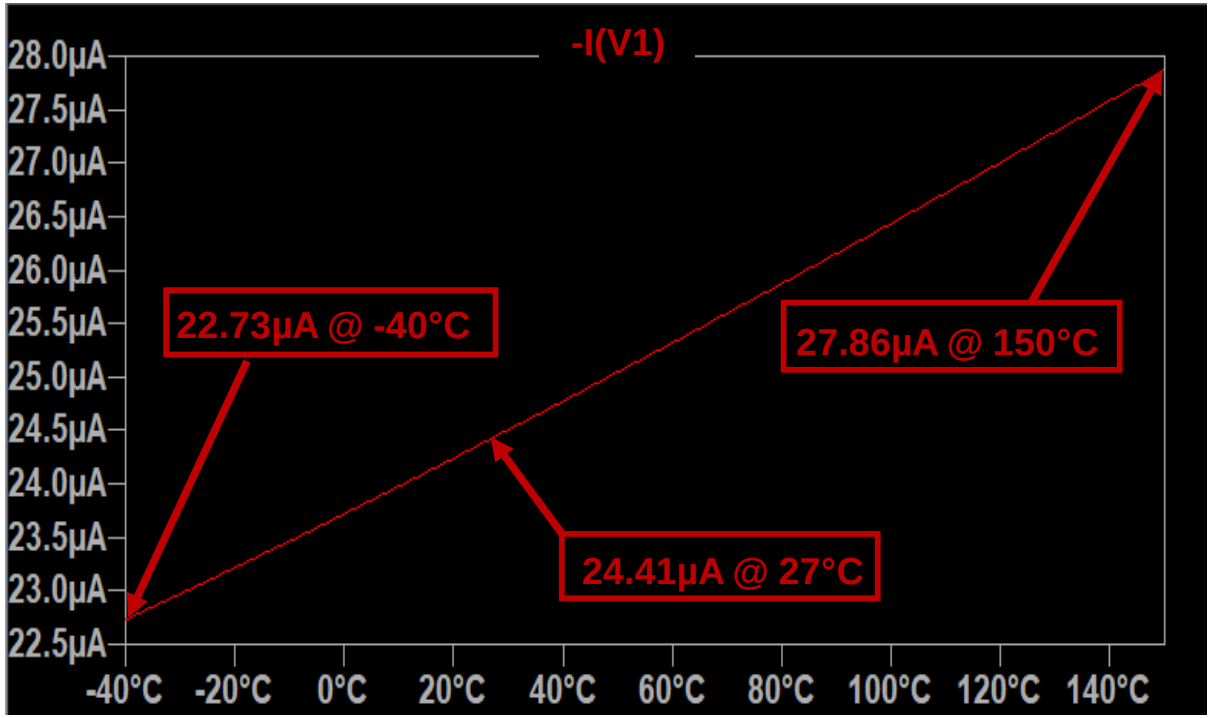

Figure 9. Quiescent current variation with temperature

2.2. Quiescent current – variation with supply voltage

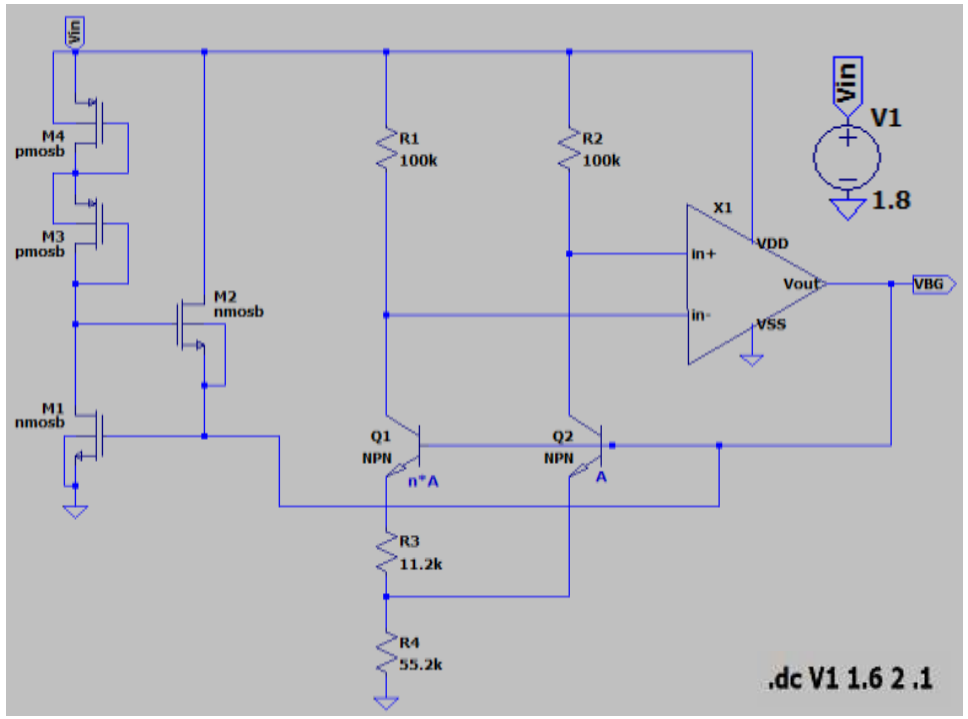

Figure 10. Bandgap circuit and simulation setup

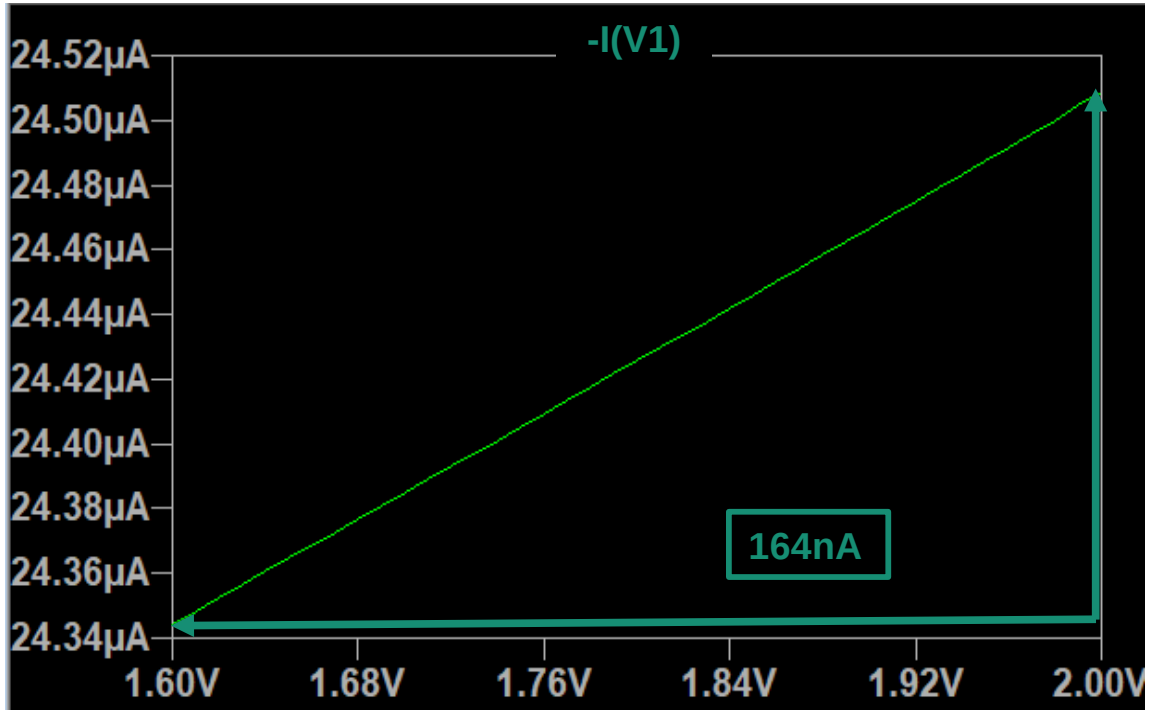

Figure 11. Quiescent current variation with supply voltage

2.2. Quiescent current – MC300 variation with process (resistor tolerance 1%)

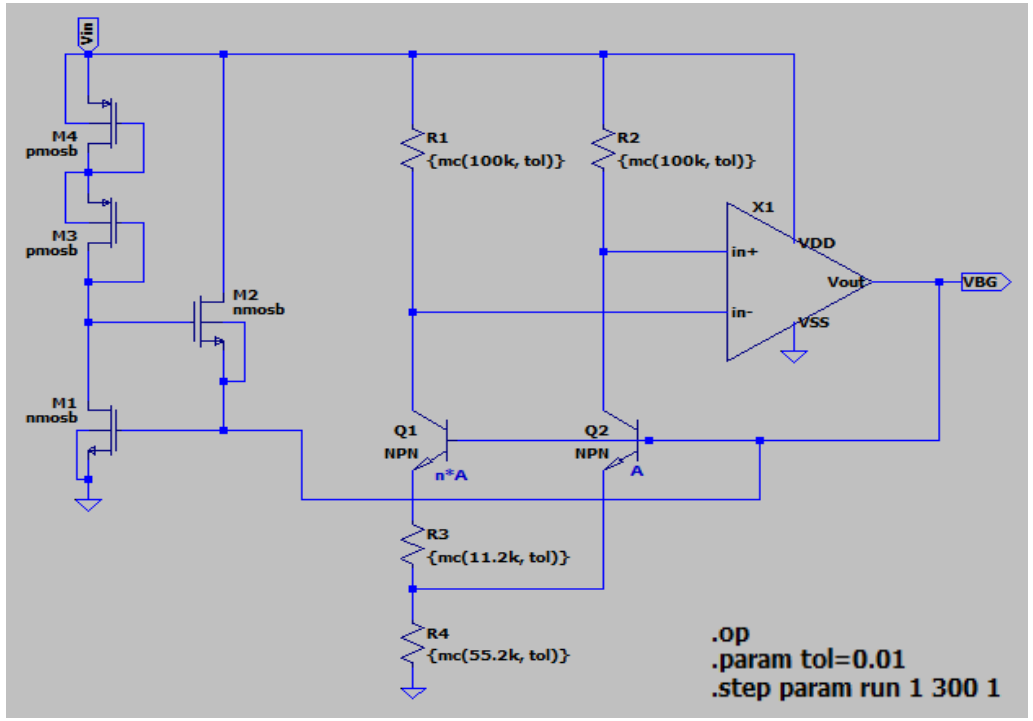

Figure 12. Bandgap circuit and simulation setup

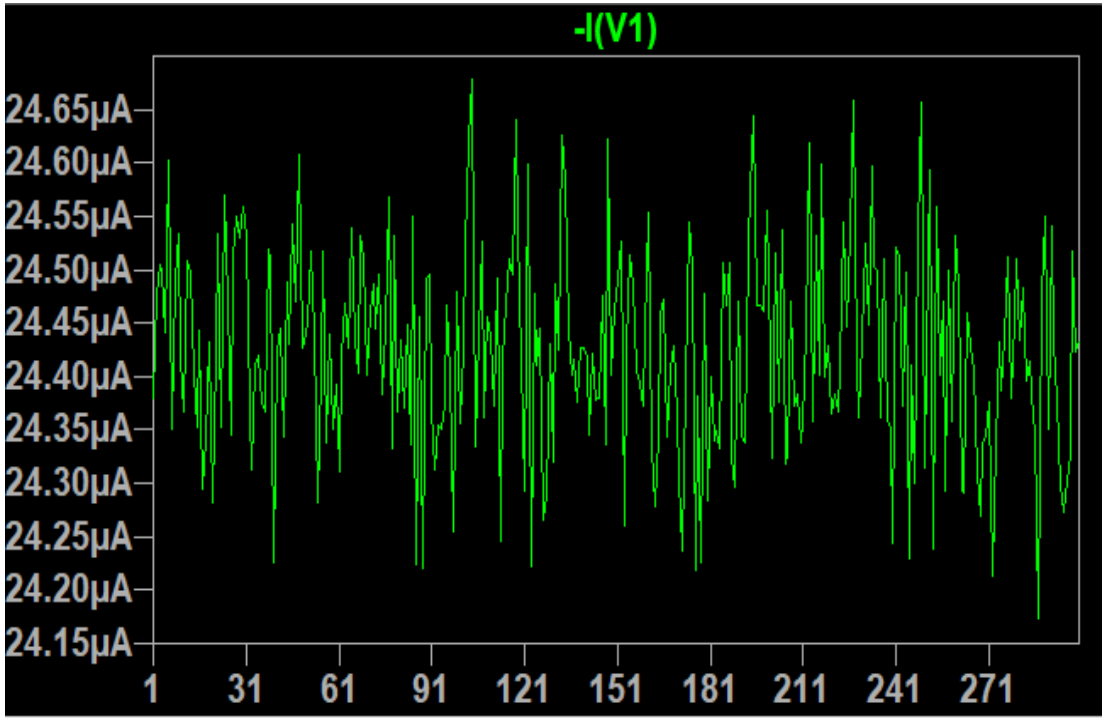

Figure 13. MC300 Quiescent current variation with process

2.3. Output voltage accuracy – variation across supply voltage

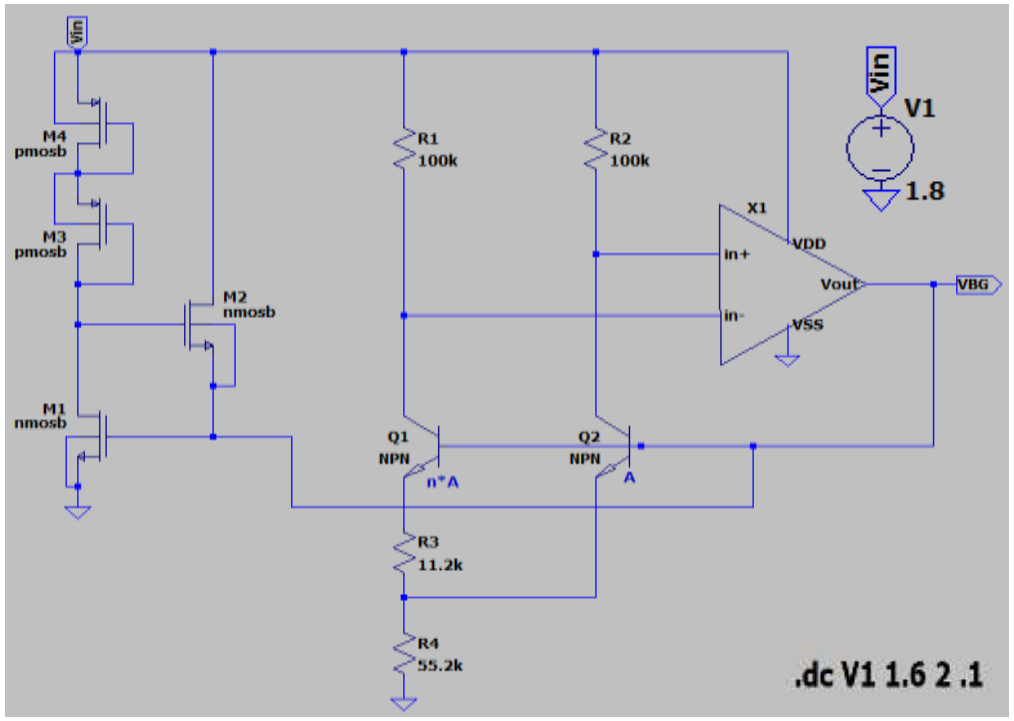

Figure 14. Bandgap circuit and simulation setup

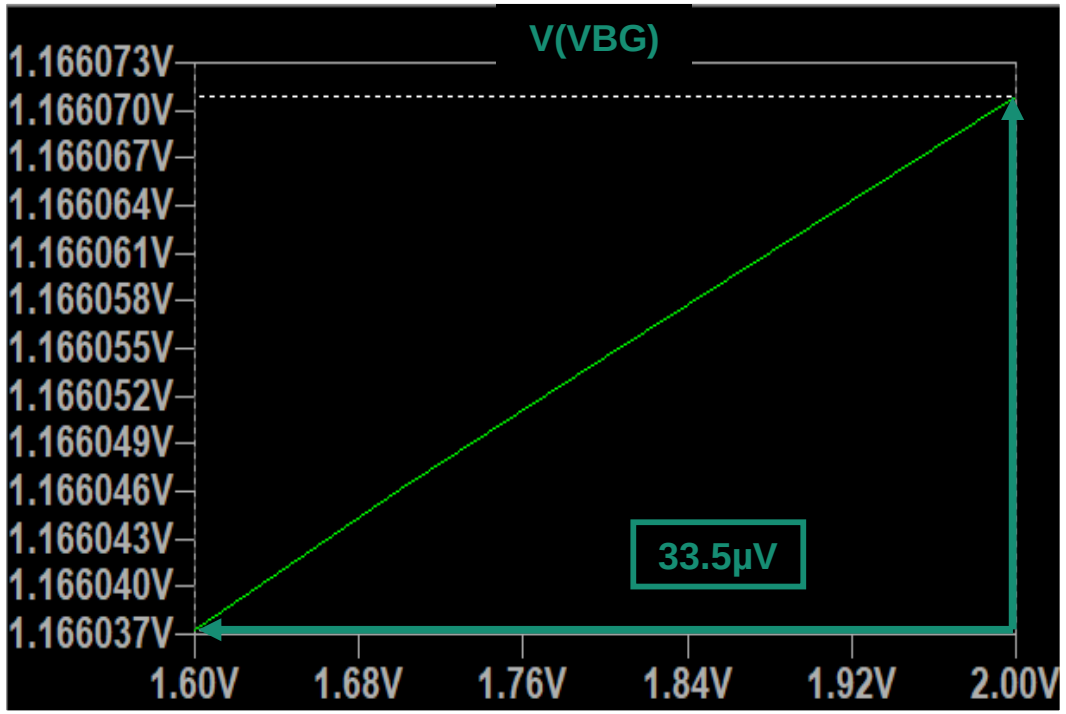

Figure 15. Output voltage variation across supply voltage

2.3. Output voltage accuracy – MC300 variation with process (resistor tolerance 1%)

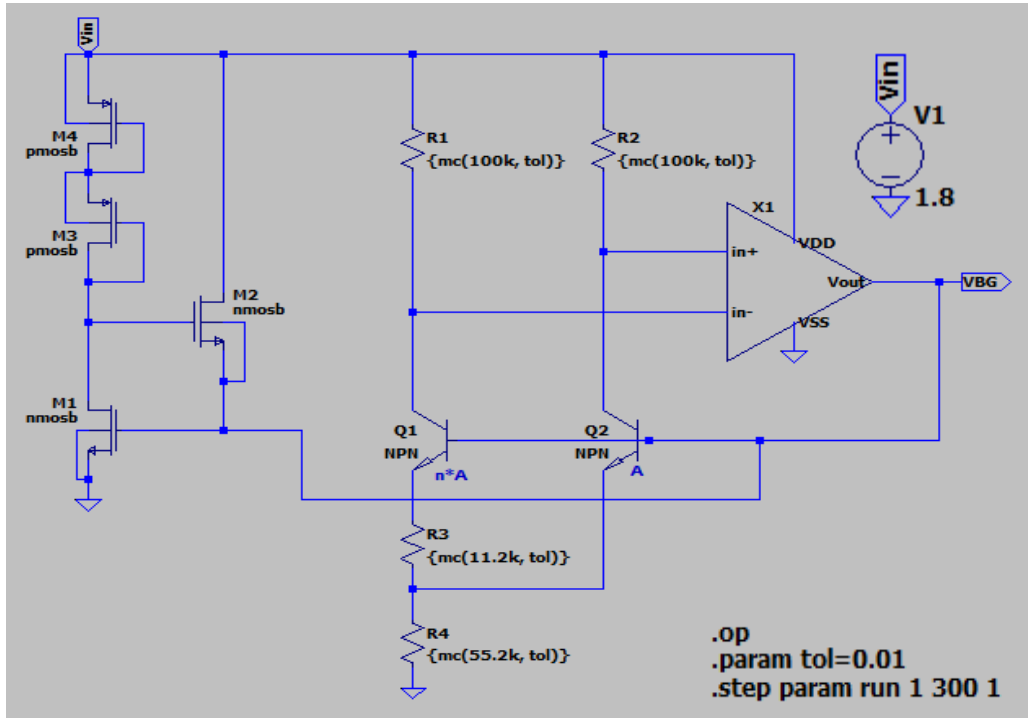

Figure 20. Bandgap circuit and simulation setup

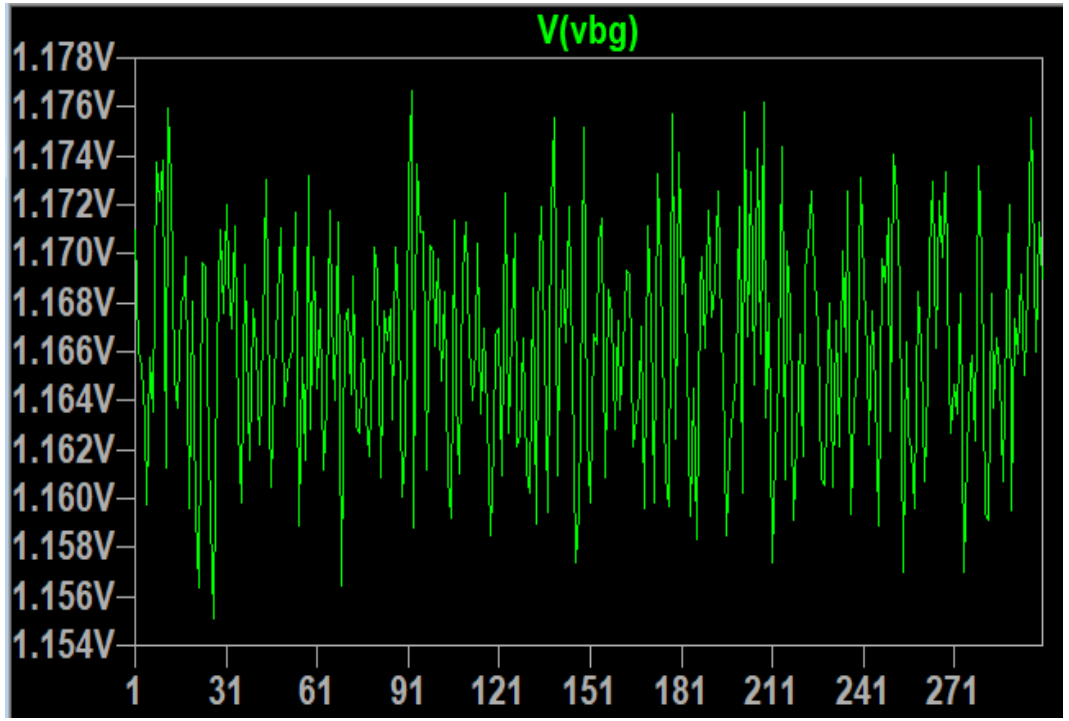

Figure 21. MC300 Output voltage variation with process

2.3. Output voltage accuracy – MC300 variation with process across temperature (resistor tolerance 1%)

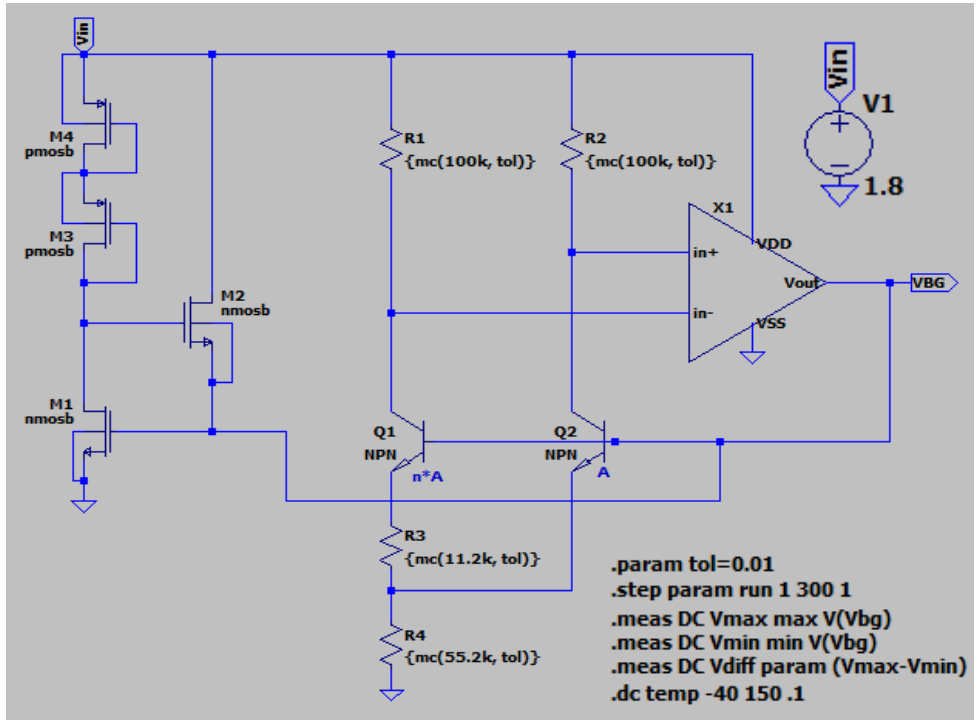

Figure 16. Bandgap circuit and simulation setup

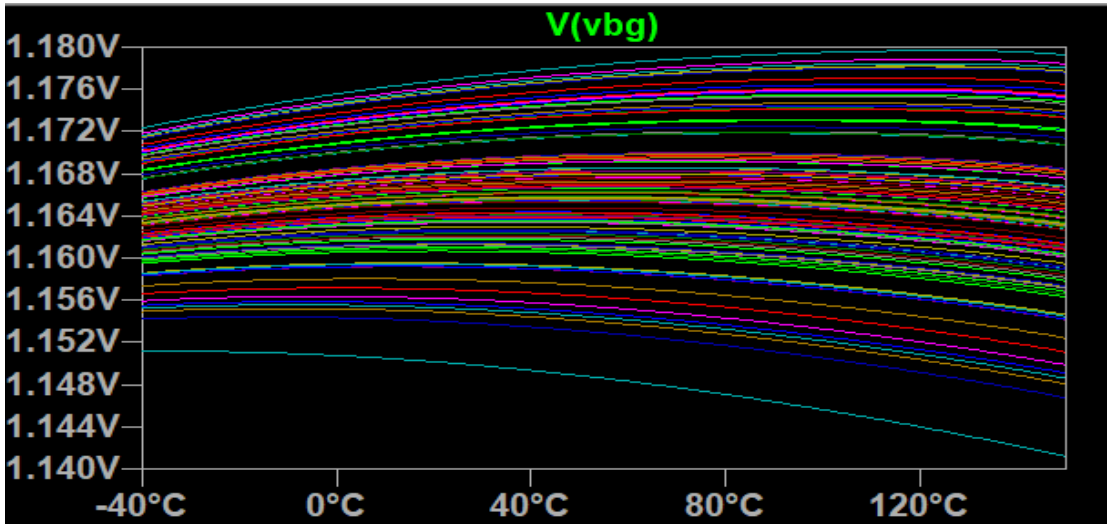

Figure 17. Output voltage MC300 across temperature

VBG_MAX = 1.18V **VBG_MIN = 1.142V**

2.3. Output voltage accuracy – MC300 variation with process across supply voltage (resistor tolerance 1%)

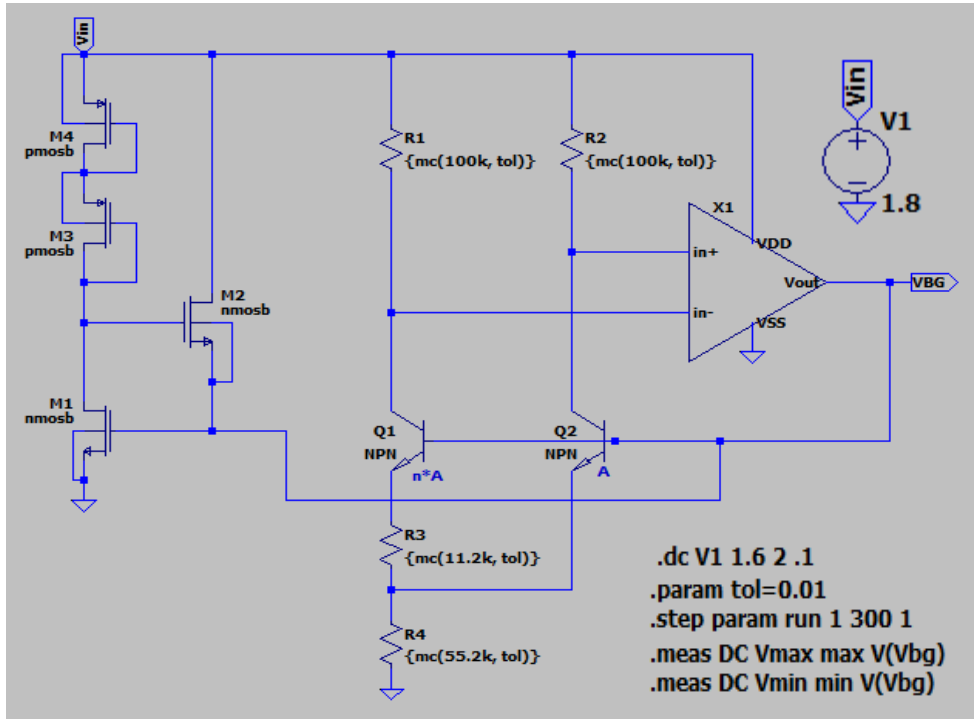

Figure 18. Bandgap circuit and simulation setup

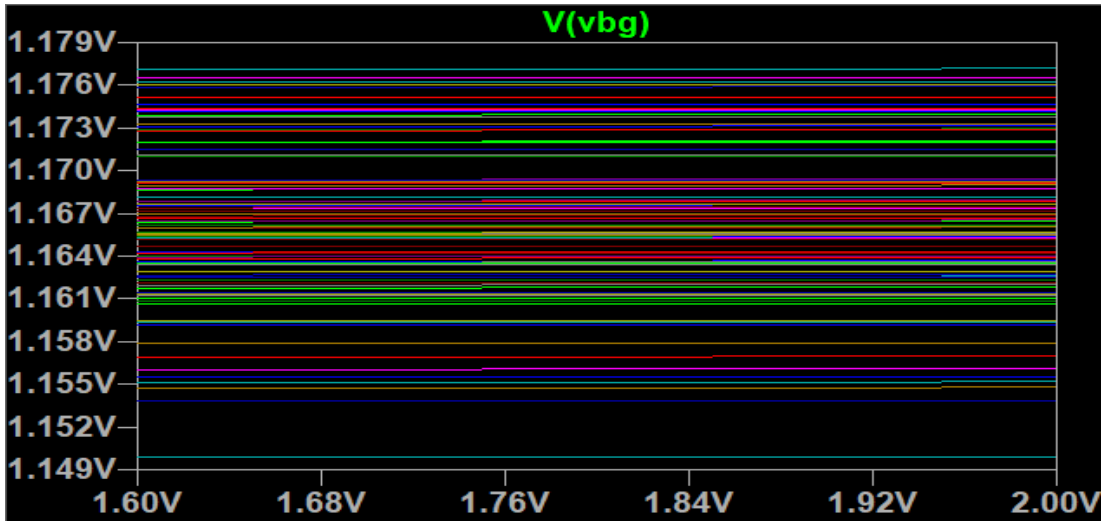

Figure 19. Output voltage with MC300 across supply voltage

VBG_MAX = 1. 177V **VBG_MIN = 1.15V**

2.3. Output voltage accuracy – PVT variations

The output voltage variation with temperature = 2.54mV

The output voltage variation with supply voltage = 33.54µV

The output voltage variation with the resistor`s tolerance 1% = 22mV in worst case

Total output voltage variation with PVT = 24.57mV in worst case

Output voltage accuracy = 2.1% in worst case

Improvement: 1.6% output voltage accuracy with 0.5% resistor tolerance in worst case

2.4. Stability analysis

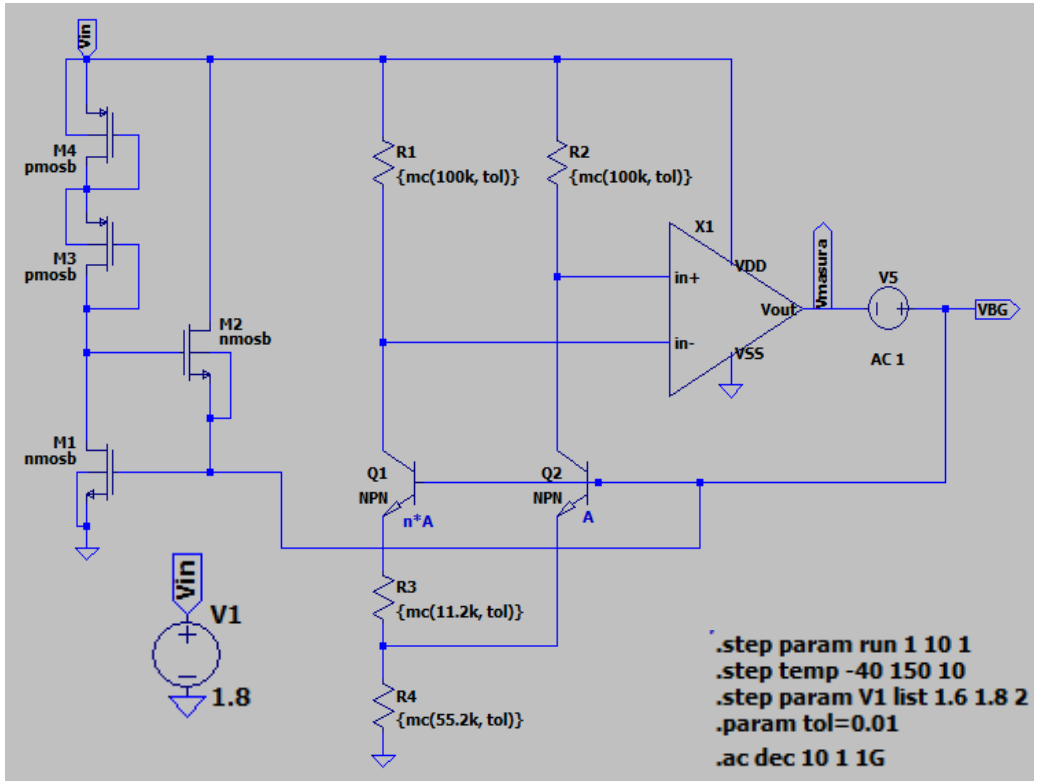

Figure 22. Bandgap circuit and simulation setup

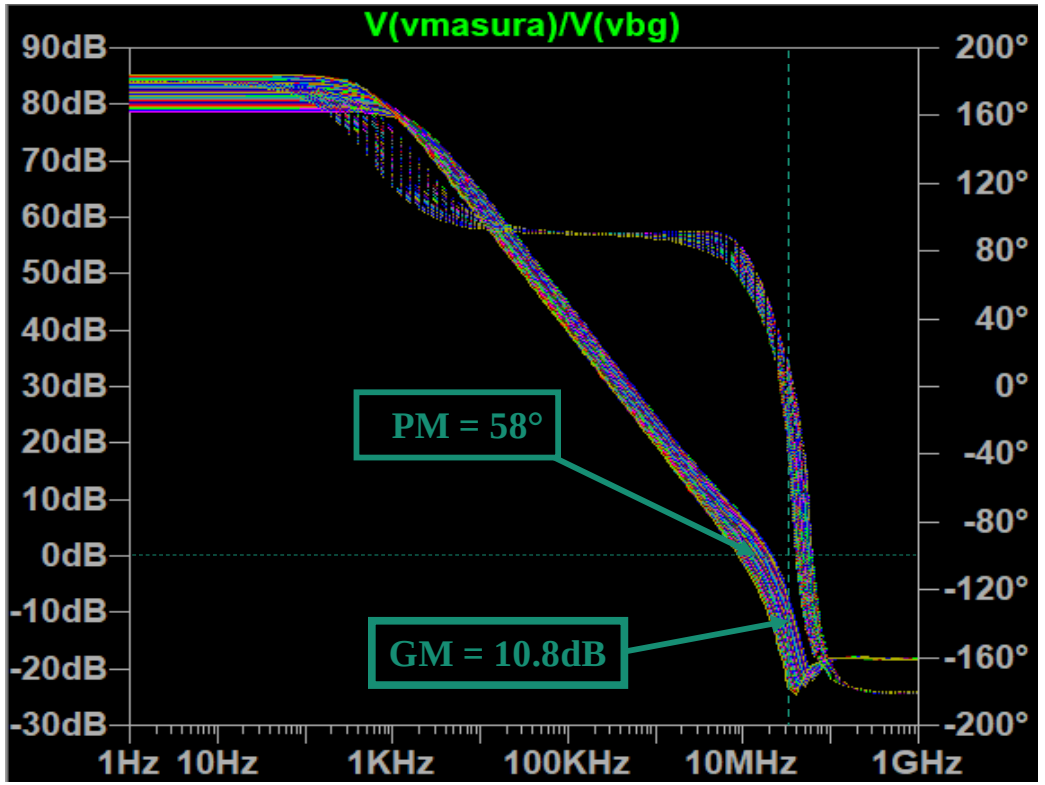

Figure 23. The frequency characteristic of the designed bandgap reference

2.5. Start-up time

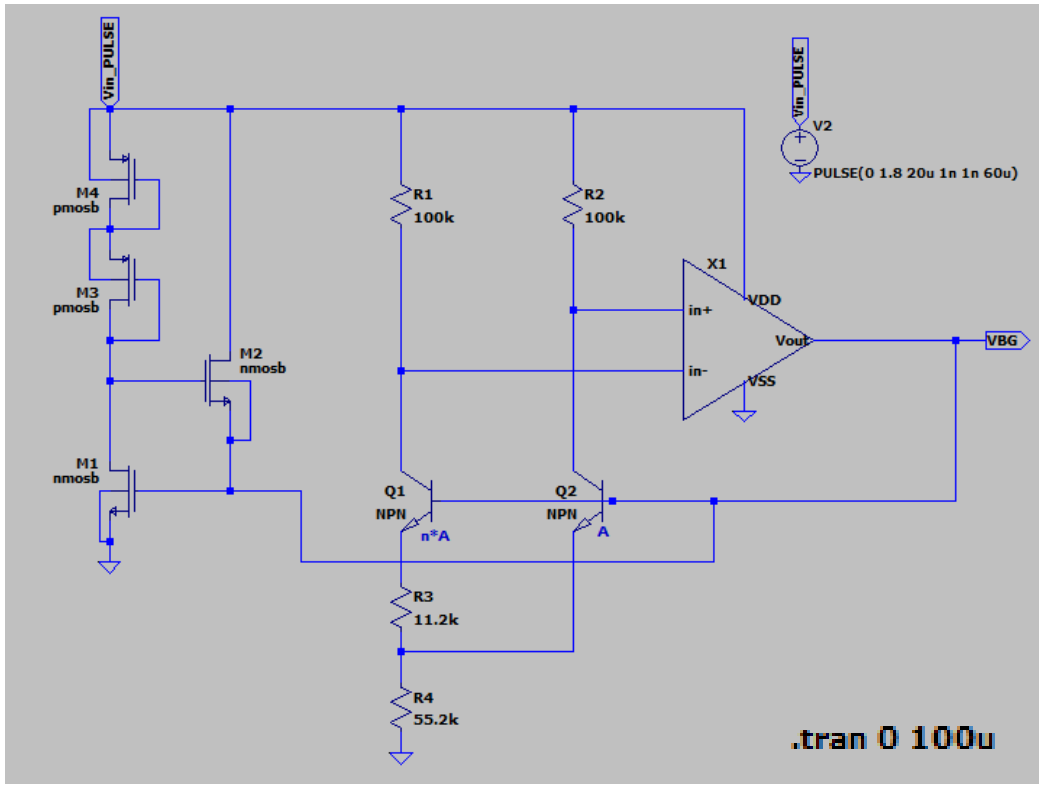

Figure 24. Bandgap circuit and simulation setup

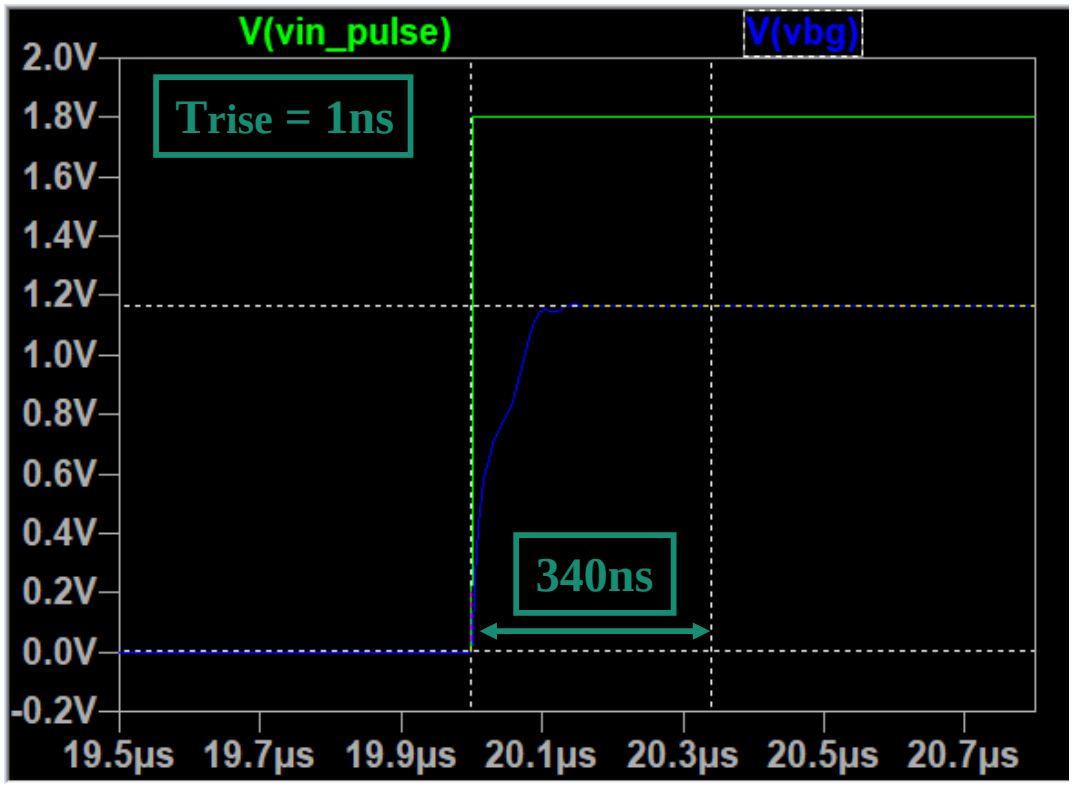

Figure 25. Start-up time

2.5. PSRR

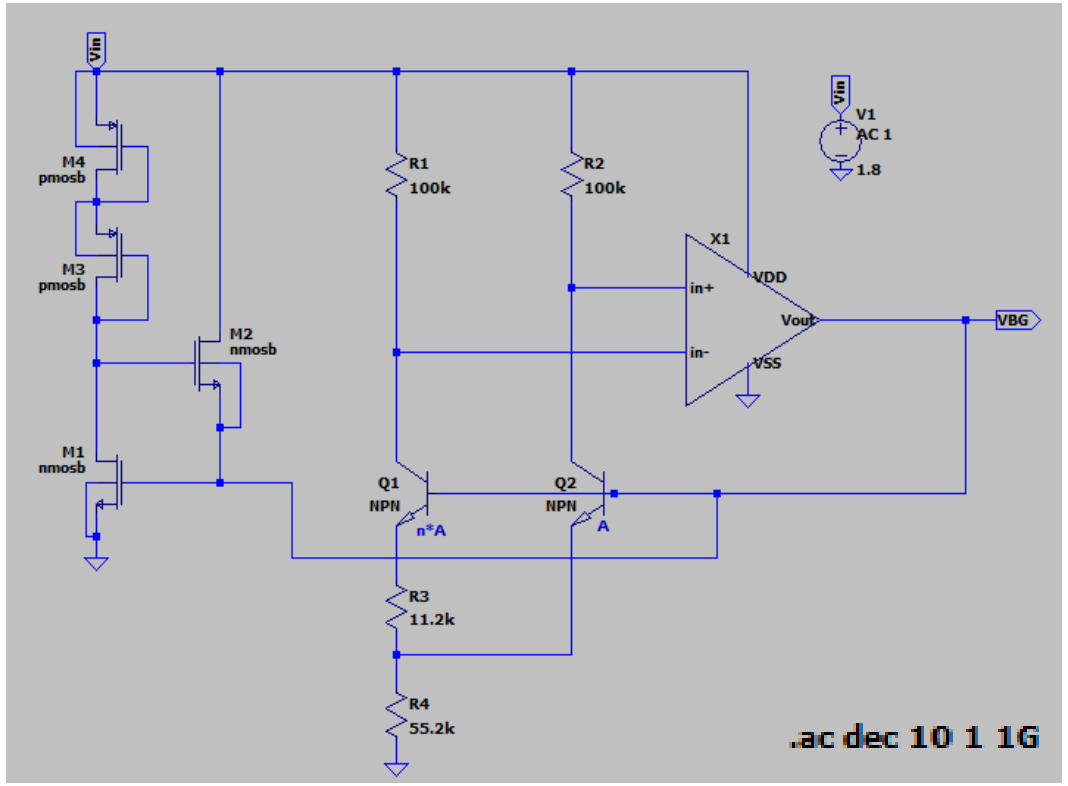

Figure 26. Bandgap circuit and simulation setup

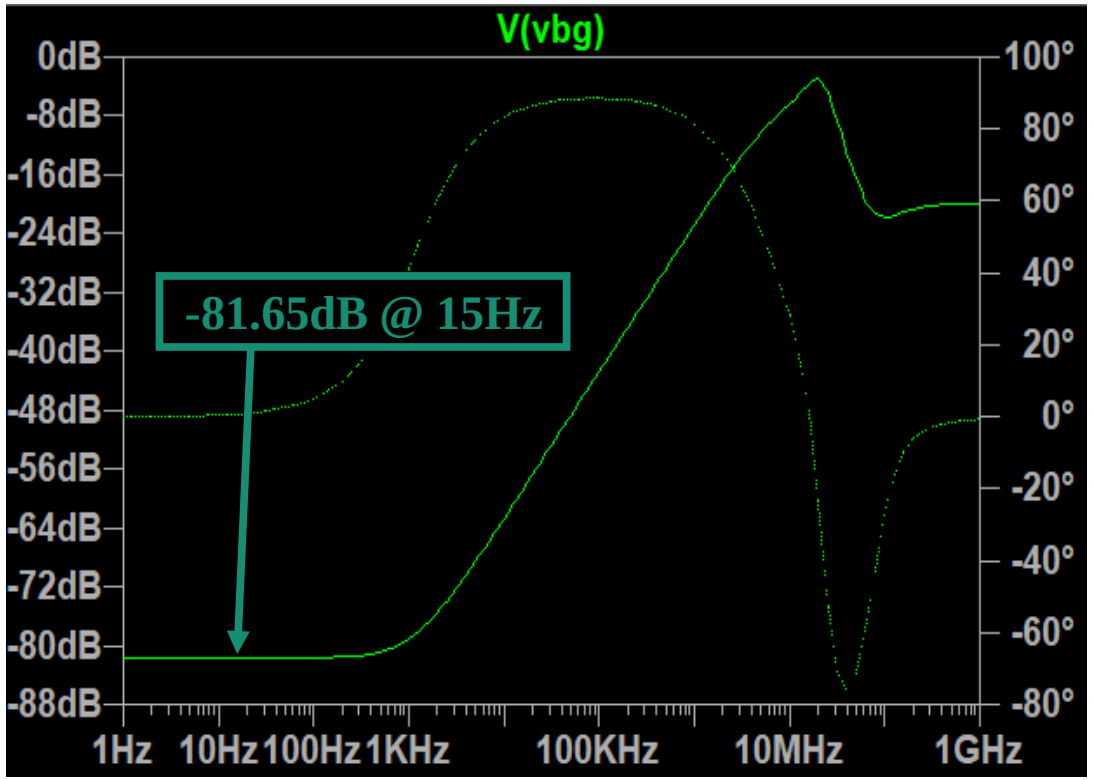

Figure 27. The PSRR of the designed voltage reference

Conclusion – Results vs. specifications

Parameter	Required	Obtained
Output voltage	1.2V	1.16V
Output voltage accuracy	±3	±2.1
Quiescent current	30µA	24.4µA
Phase margin	>40°	58°
Gain margin	>10dB	10.8dB

Tabel 4. Bandgap voltage reference requirements vs. obtained results

Second-order compensation

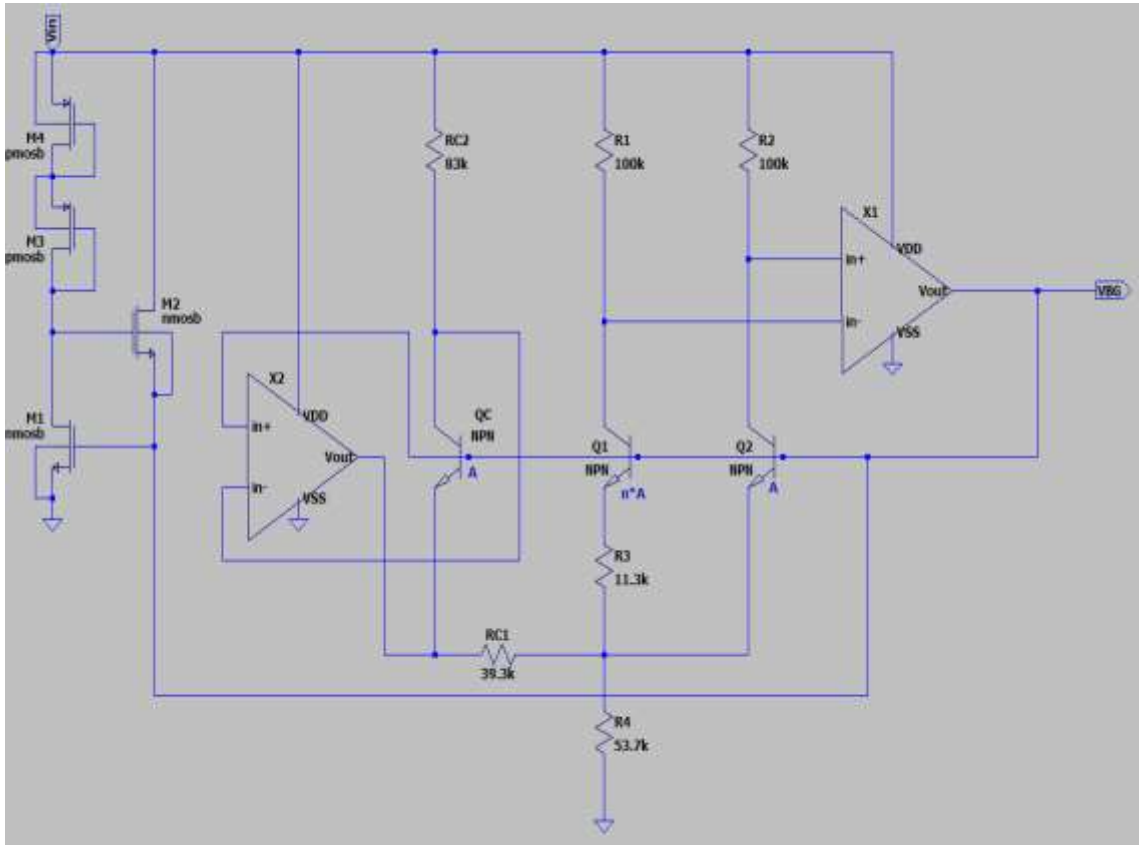

Figure 28. Second-order compensation circuit

$$V_{BG} = V_{BEQ_2} + V_{R_4}$$
$$= V_{BEQ_2} + I_4 \cdot R_4$$
$$= V_{BEQ_2} + (I_3 + I_3 + I_{\mathrm{RC1}}) \cdot R_4$$
$$= V_{BEQ_2} + 2I_3 \cdot R_4 + I_{\mathrm{RC1}} \cdot R_4$$

$$I_{RC1} = \frac{V_{BE_{QC}} - V_{BE_{Q_2}}}{RC1} = \frac{\Delta V_{BE}}{RC1} = V_T ln\left(\frac{T}{T_0}\right) \cdot \frac{1}{RC1}$$

I_{RC1} **non-linear current for compensation**

$$V_{BG} = V_{BEQ_2} + \frac{2R_4}{R_3} V_T \ln(n) + \frac{R_4}{RC1} V_T ln\left(\frac{T}{T_0}\right)$$

Second-order compensation

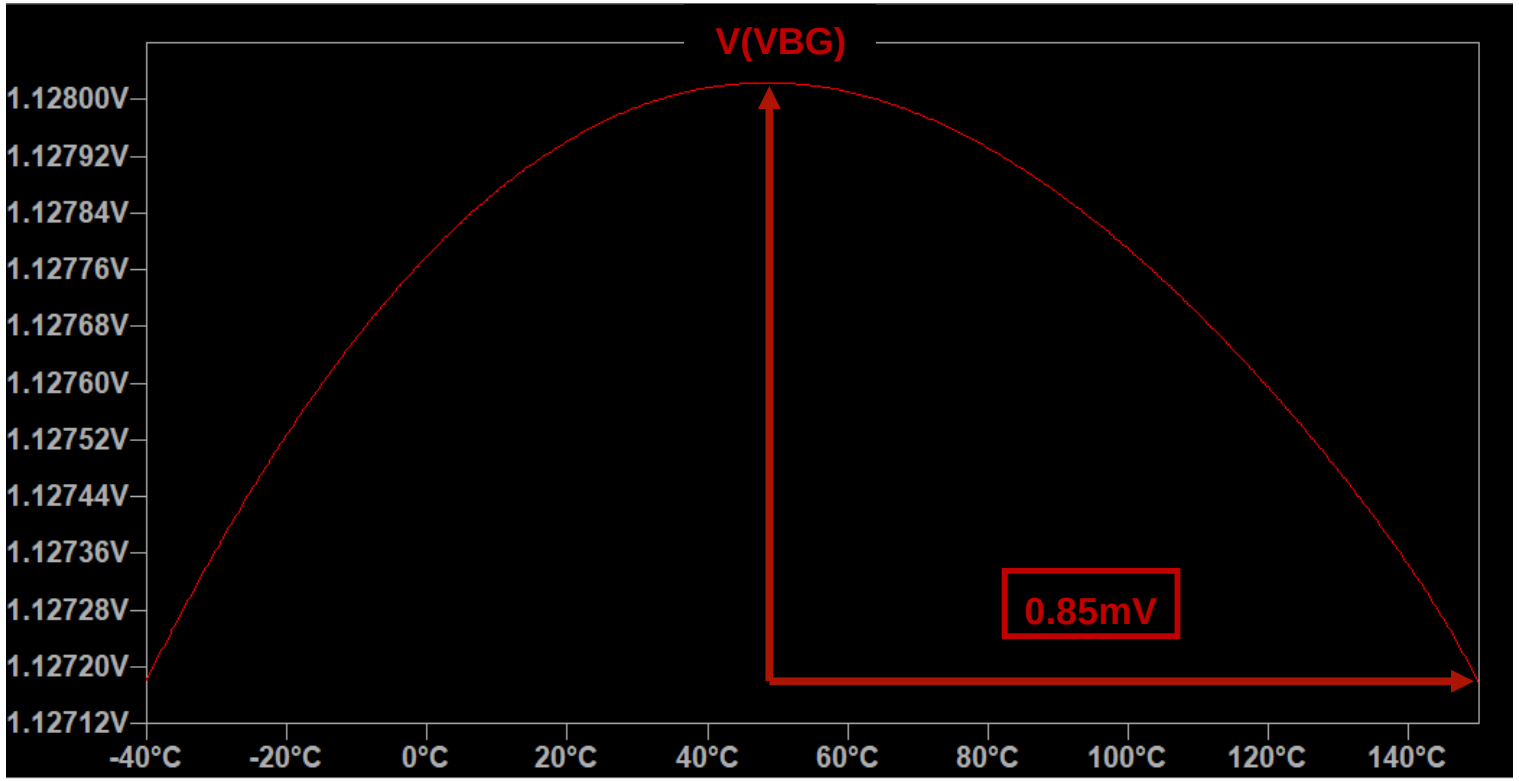

Figure 29. Temperature coefficient of second-order compensation

Thank you for your attention!